REVISION	REV DATE	ECO NUMBER	REVISED BY
1	Feb-18-2021	EC-44101	Trongone, Eric

RELEASED PER EC
-
-

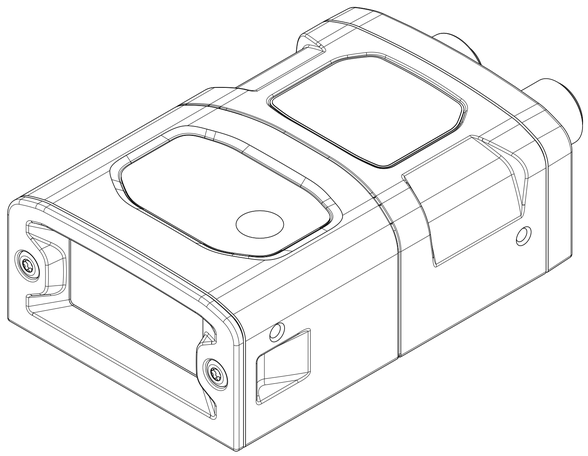

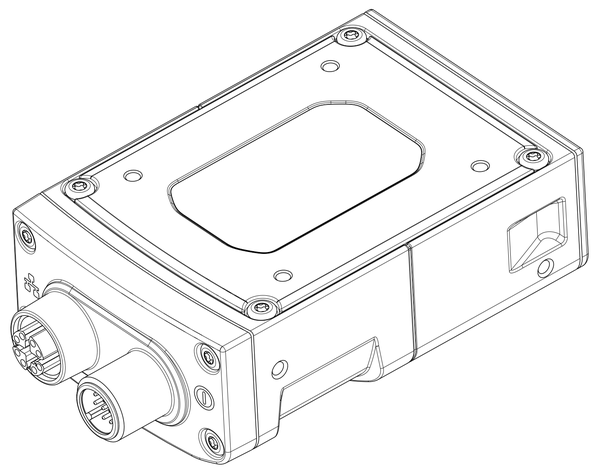

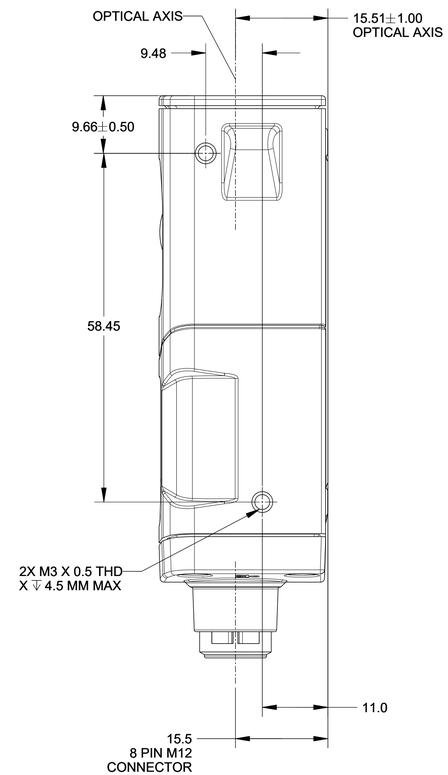

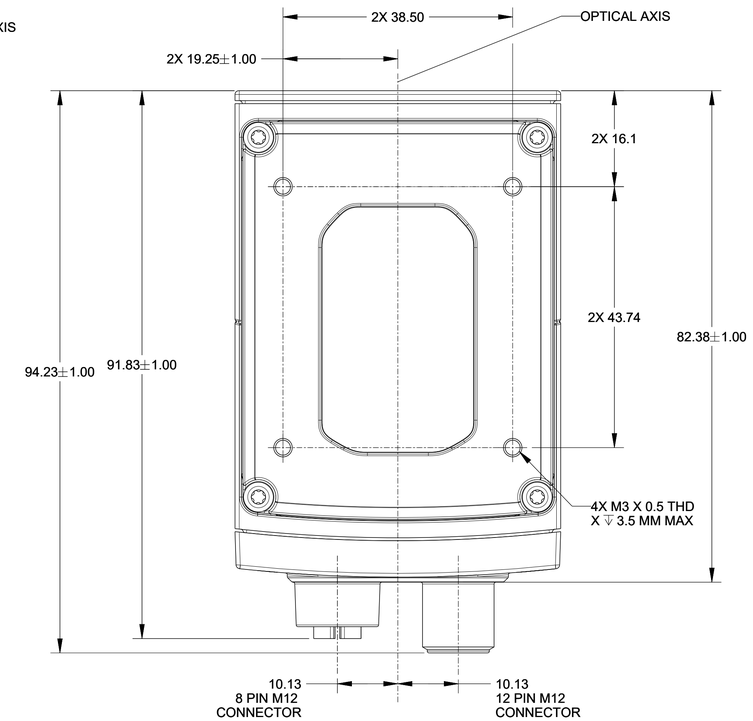

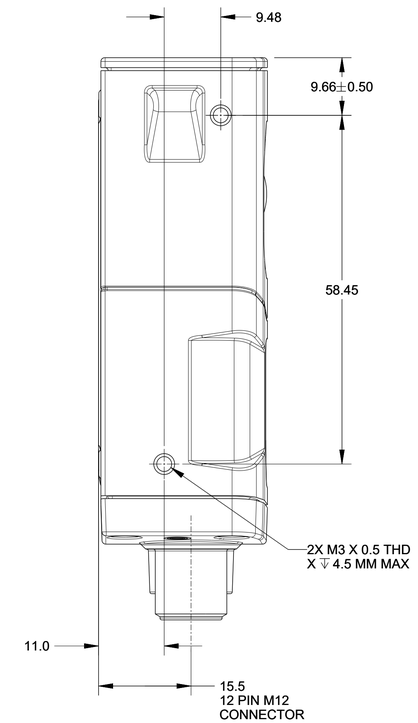

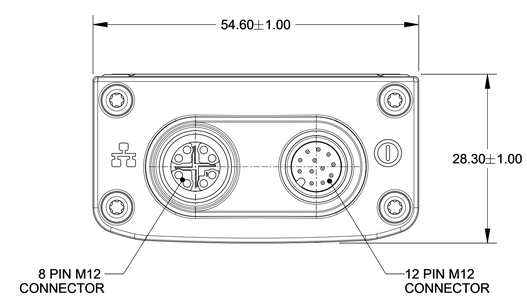

NOTES: UNLESS OTHERWISE SPECIFIED NOTES:

1. DIMENSIONS SHOWN ARE NOMINAL. REFER TO TOLERANCE TABLE IN LOCATION A2 IF DIMENSIONS ARE NOT TOLERANCED.

2. DEPTH OF THREADED HOLES SHOWN REPRESENT THE MAXIMUM USABLE TAP DEPTH.
   FASTENERS MUST BE CONSIDERED TO NOT EXCEED THE SPECIFIED MAXIMUM THREAD DEPTH INTO THE DEVICE.

3. RECOMMENDED MOUNTING TORQUE: 6 IN*LBS.

RoHS COMPLIANCE

THIS PARTIASSEMBLY TO COMPLY WITH ZEBRA TECHNOLOGIES MATERIAL CONTENT POLICY NUMBER CPX-CE-010. ANY MATERIAL OR PROCESS CHANGE AFFECTING COMPLIANCE WITH THIS POLICY MUST BE COMMUNICATED TO AND APPROVED BY ZEBRA TECHNOLOGIES PRIOR TO MAKING THE ACTUAL CHANGE.

CONFIDENTIAL AND PROPRIETARY

THE INFORMATION CONTAINED HEREIN IS THE CONFIDENTIAL AND THE EXCLUSIVE PROPERTY OF ZIH CORP. THIS DOCUMENT, AND THE INFORMATION CONTAINED HEREIN, SHALL NOT BE COPIED, REPRODUCED, PUBLISHED, DISPLAYED OR DISTRIBUTED, IN WHOLE OR IN PART, IN ANY MEDIUM, BY ANY MEANS, FOR ANY PURPOSE WITHOUT THE EXPRESS WRITTEN CONSENT OF ZIH CORP.

© ZIH CORP. 2017 ALL RIGHTS RESERVED

ENCIRCLED DIMENSIONS INDICATE CRITICAL-TO-FUNCTION FEATURES

Material: N/A
Finish / Color: N/A
Specifications: SEE NOTES
Created By: Trongone, Eric
Create Date: Feb-18-2021

DIMENSIONS ARE IN: Metric (mm)
INTERPRET PER: ASME Y14.5M-1994
TOLERANCES UNLESS OTHERWISE SPECIFIED
X.=± 1
.X=± 0.50
.XX=± 0.25
ANGLES=± 0.5°

VIEW PROJECTION

ZEBRA
www.Zebra.com

DO NOT SCALE DRAWING

DETAIL: MOUNTING
XS20

Size: D
PD-000490-XX
Revision: 1
Scale: 2.00
Model Name: ASSY_TOP_XS20 :: 1.83
Drawing Name: PD-000490-XX :: 1.6
Sheet: 1 OF 1

Zebra_US_D